EARTH MOVER!

BUILDING STEPS

The powerful earth mover is on the job at the construction site! Its huge tracks let it move over any terrain, and its powerful blade can push tons of dirt out of the way.

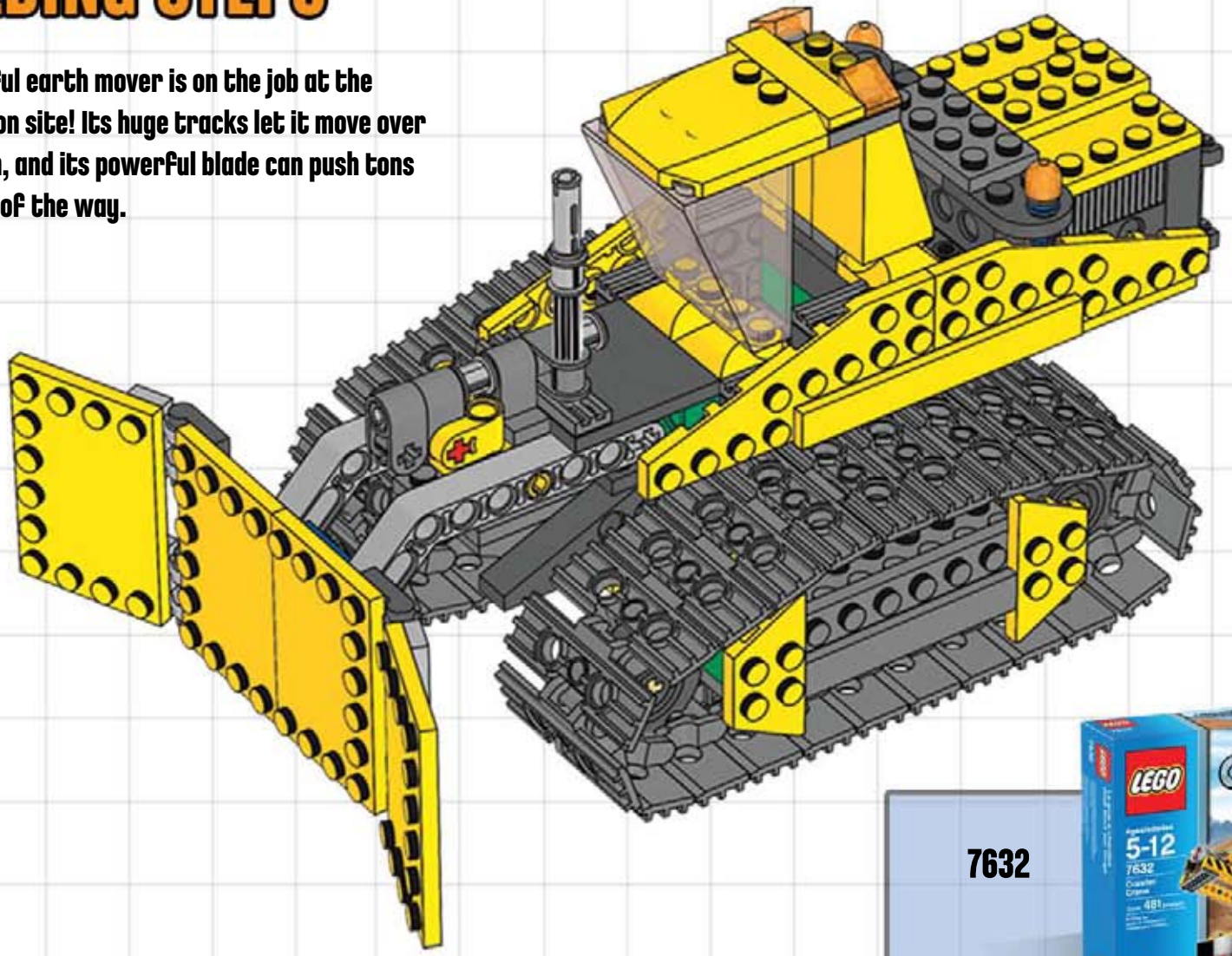

LEGO club

LEGO and the LEGO Logo are trademarks of the LEGO Group. © 2009 The LEGO Group.

LEGO club EARTH MOVER!

BUILDING STEPS

LEGO club EARTH MOVER!

BUILDING STEPS

9

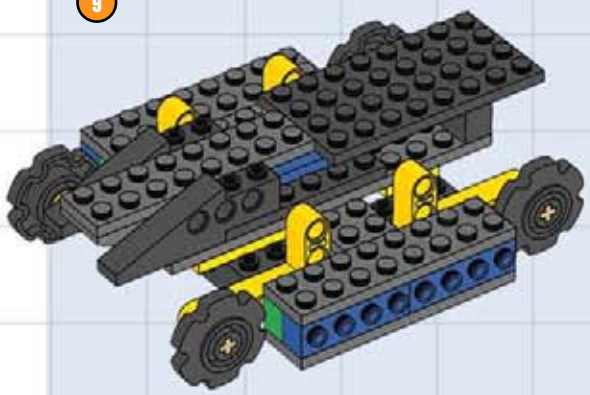

10

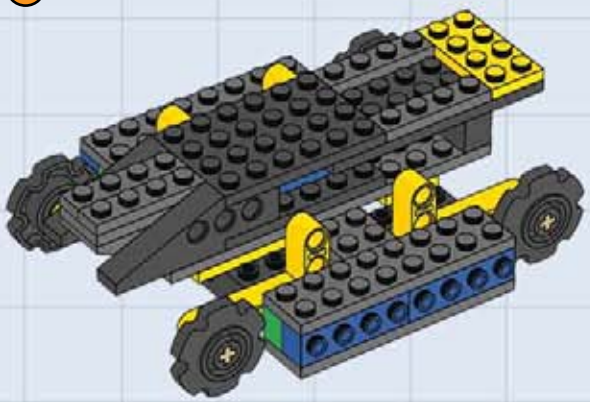

11

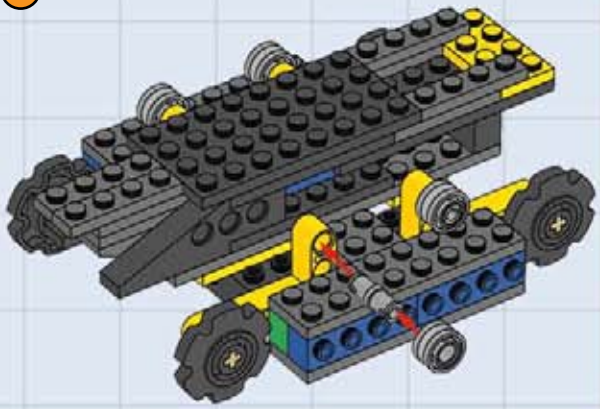

12

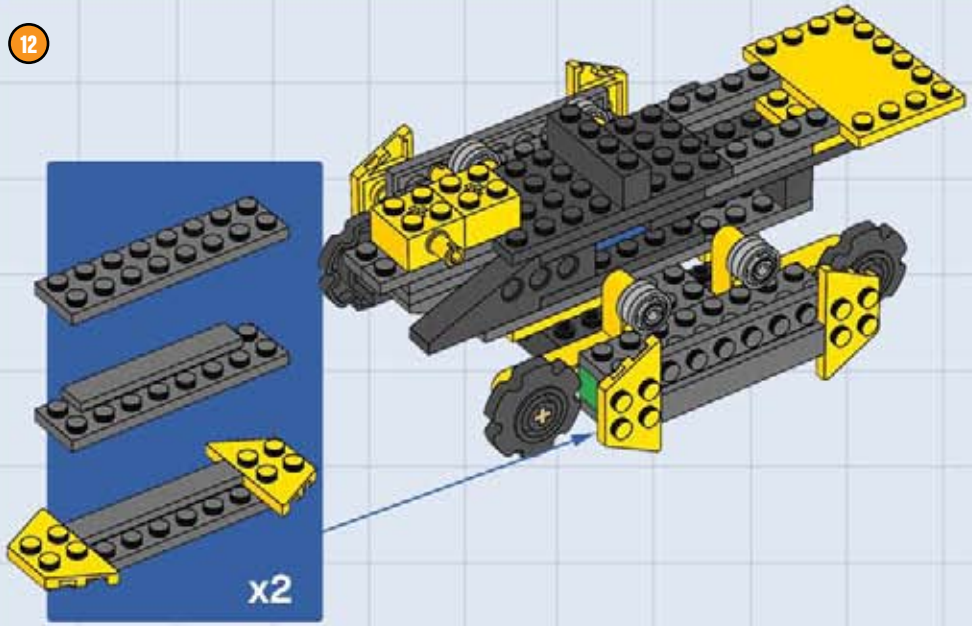

13

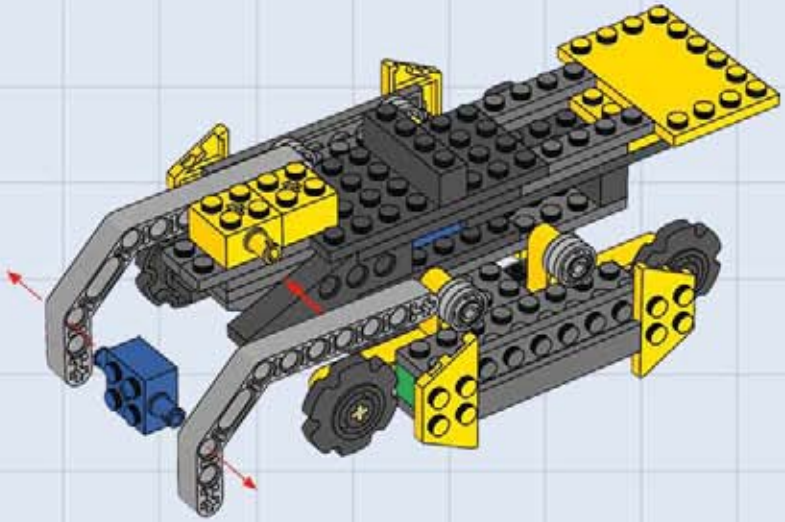

LEGO club EARTH MOVER!

BUILDING STEPS

14

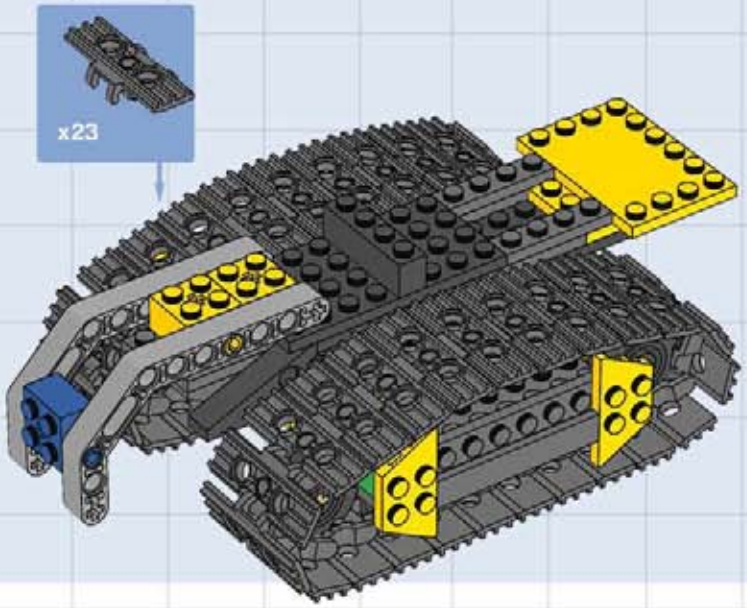

15

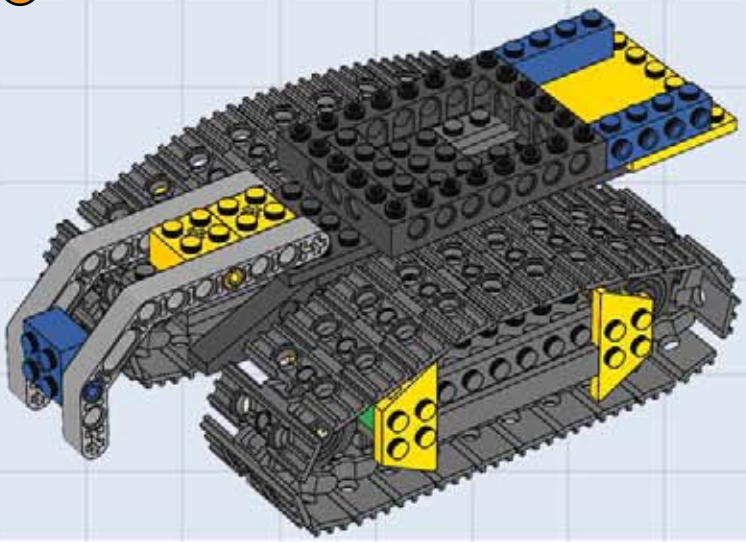

16

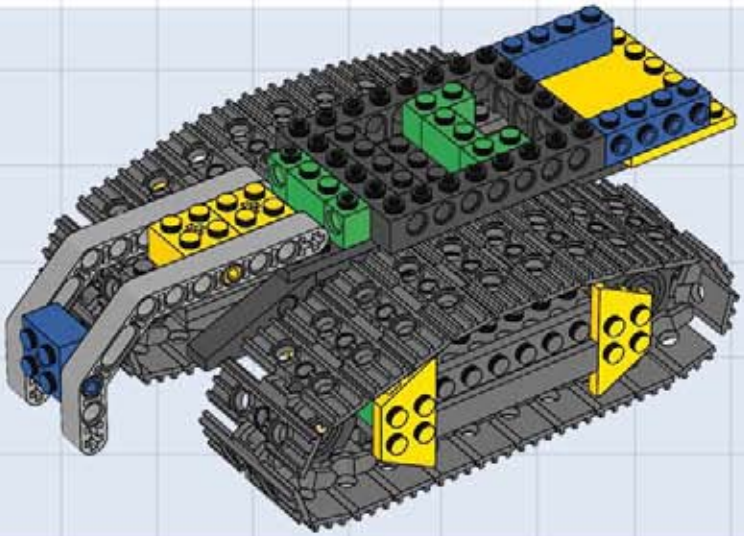

17

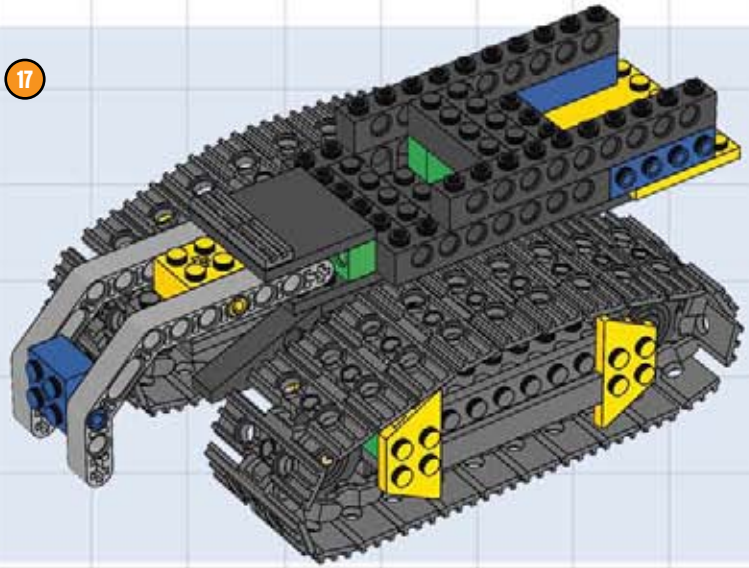

LEGO club EARTH MOVER!

BUILDING STEPS

18

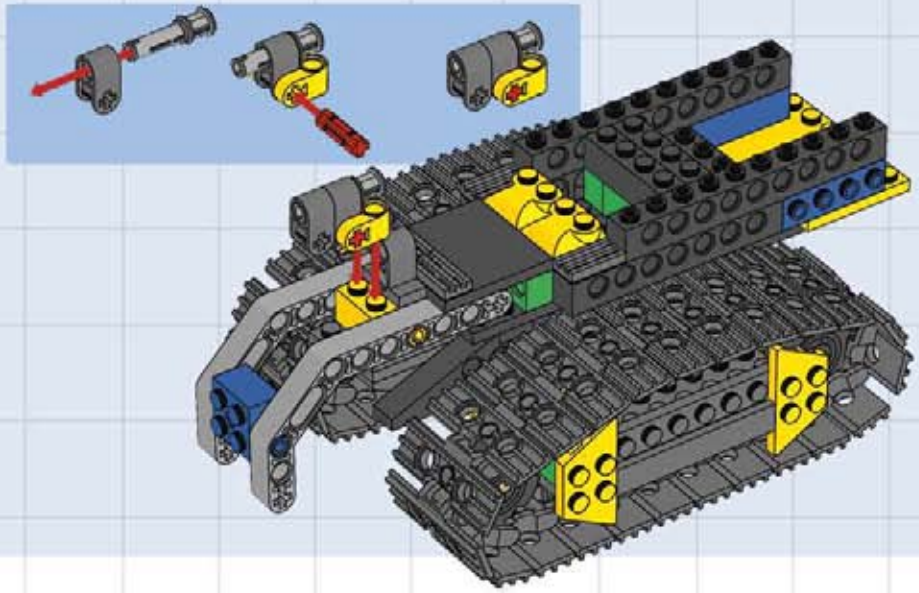

19

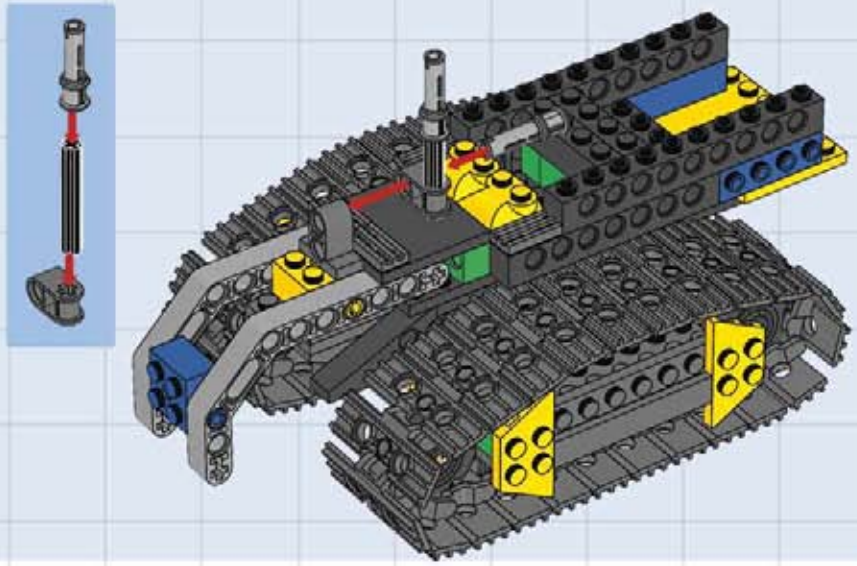

20

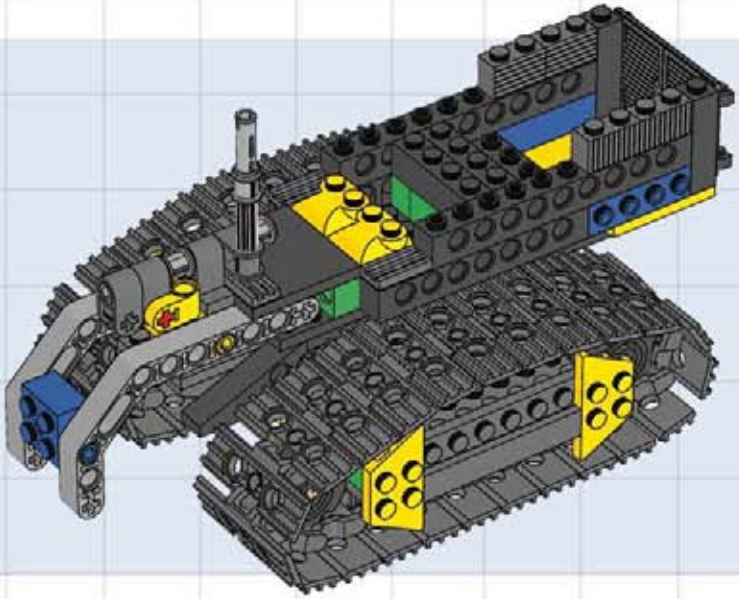

21

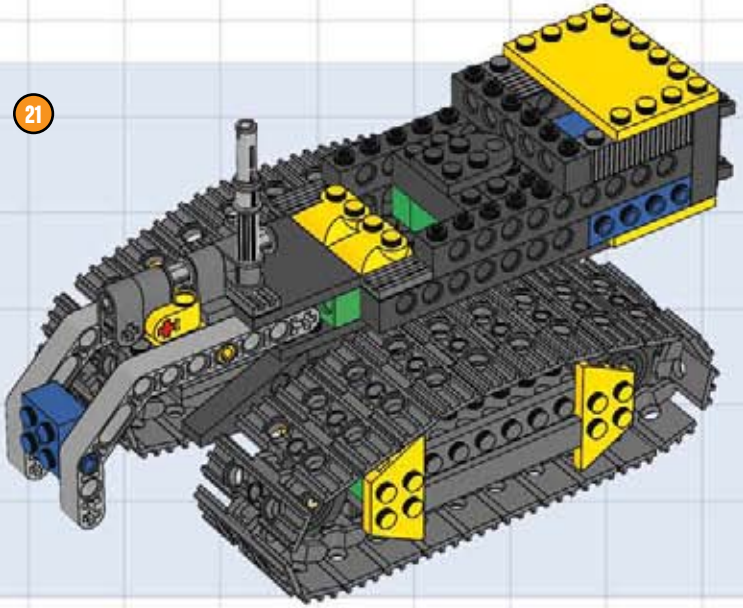

LEGO club EARTH MOVER!

BUILDING STEPS

22

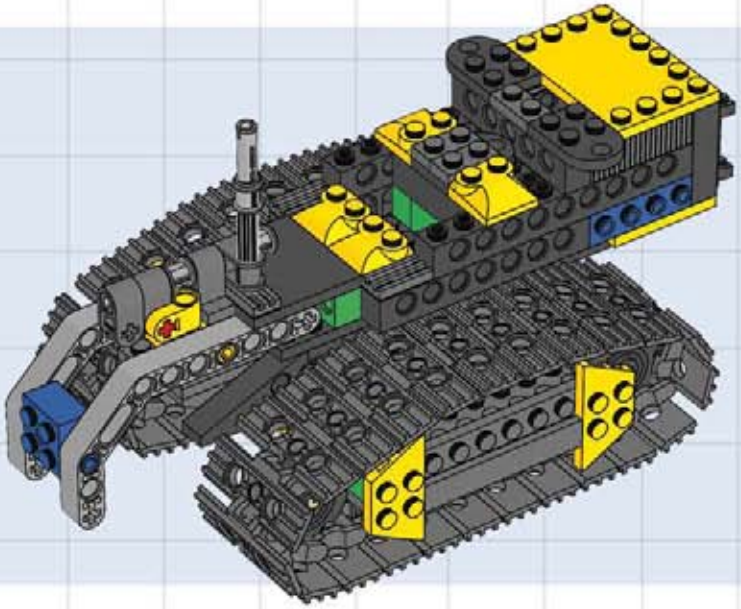

23

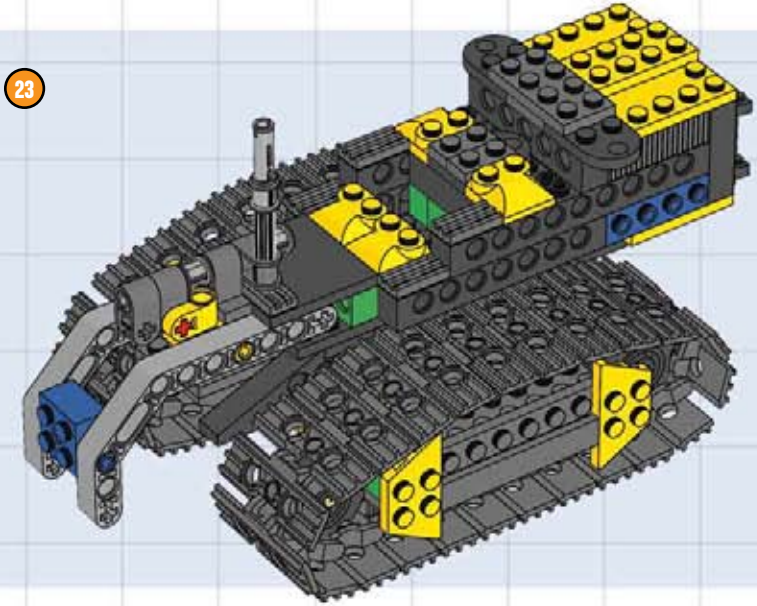

24

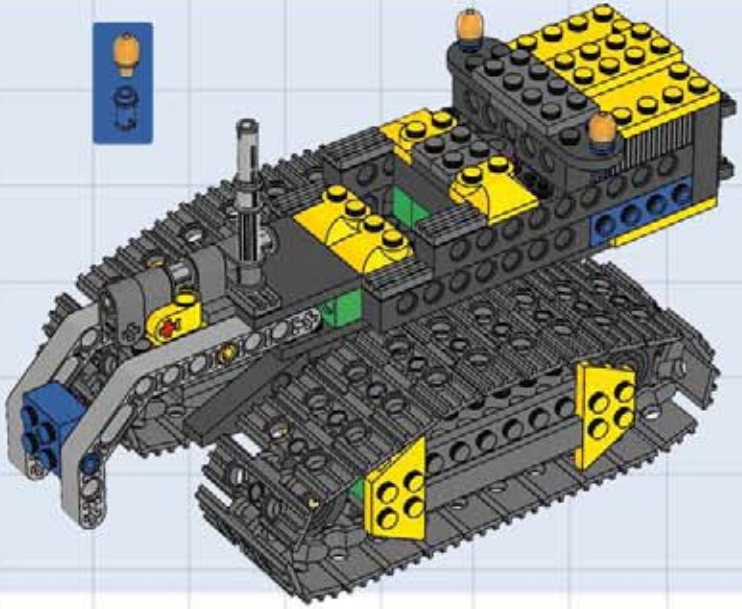

25

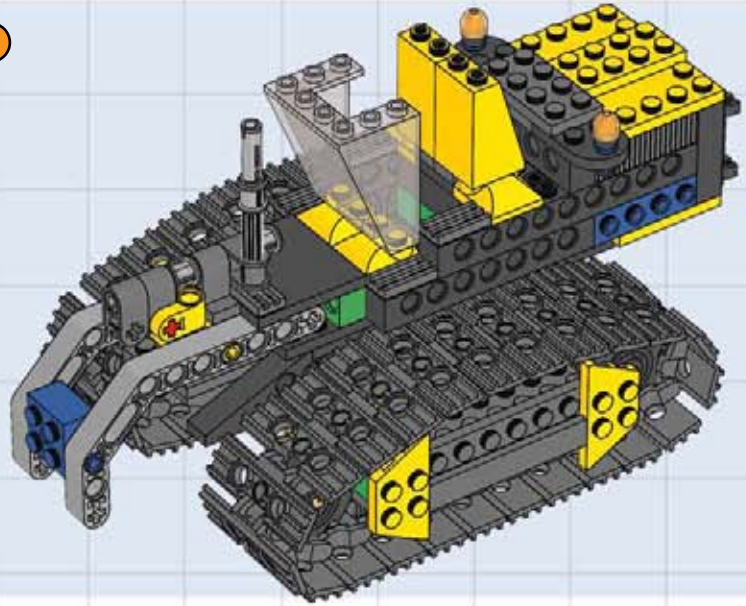

LEGO club EARTH MOVER!

BUILDING STEPS

26

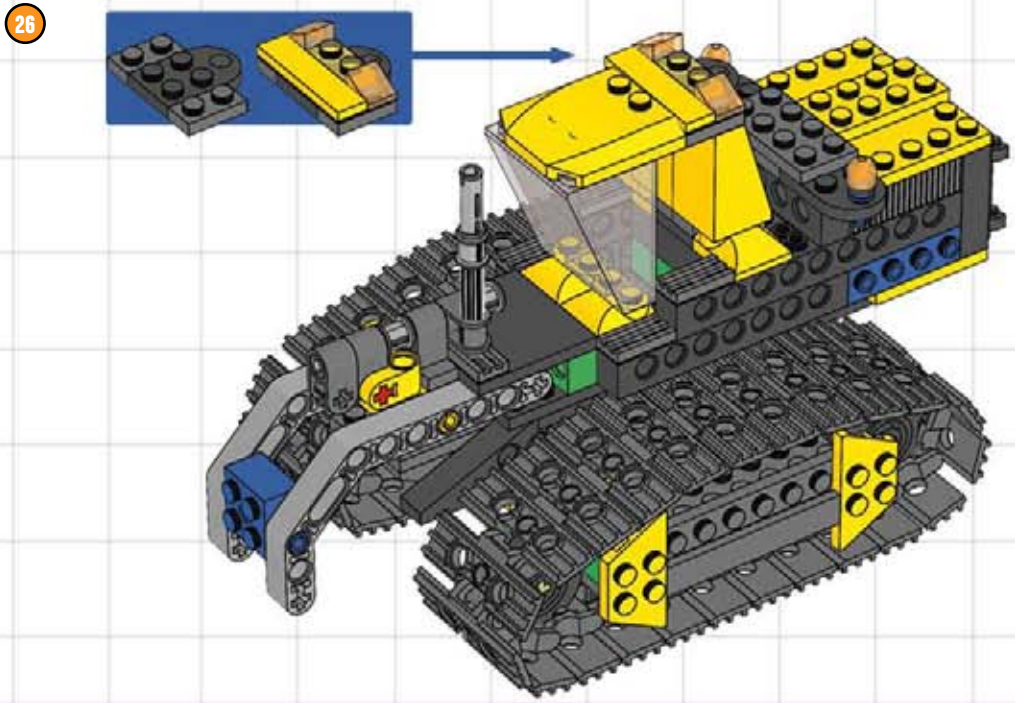

27

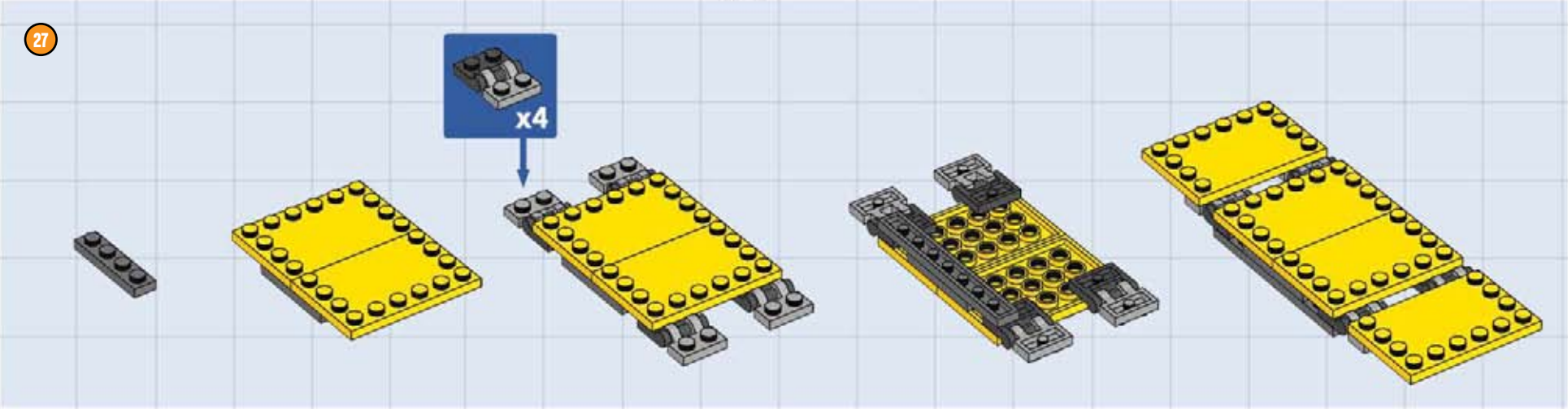

LEGO club EARTH MOVER!

BUILDING STEPS

28

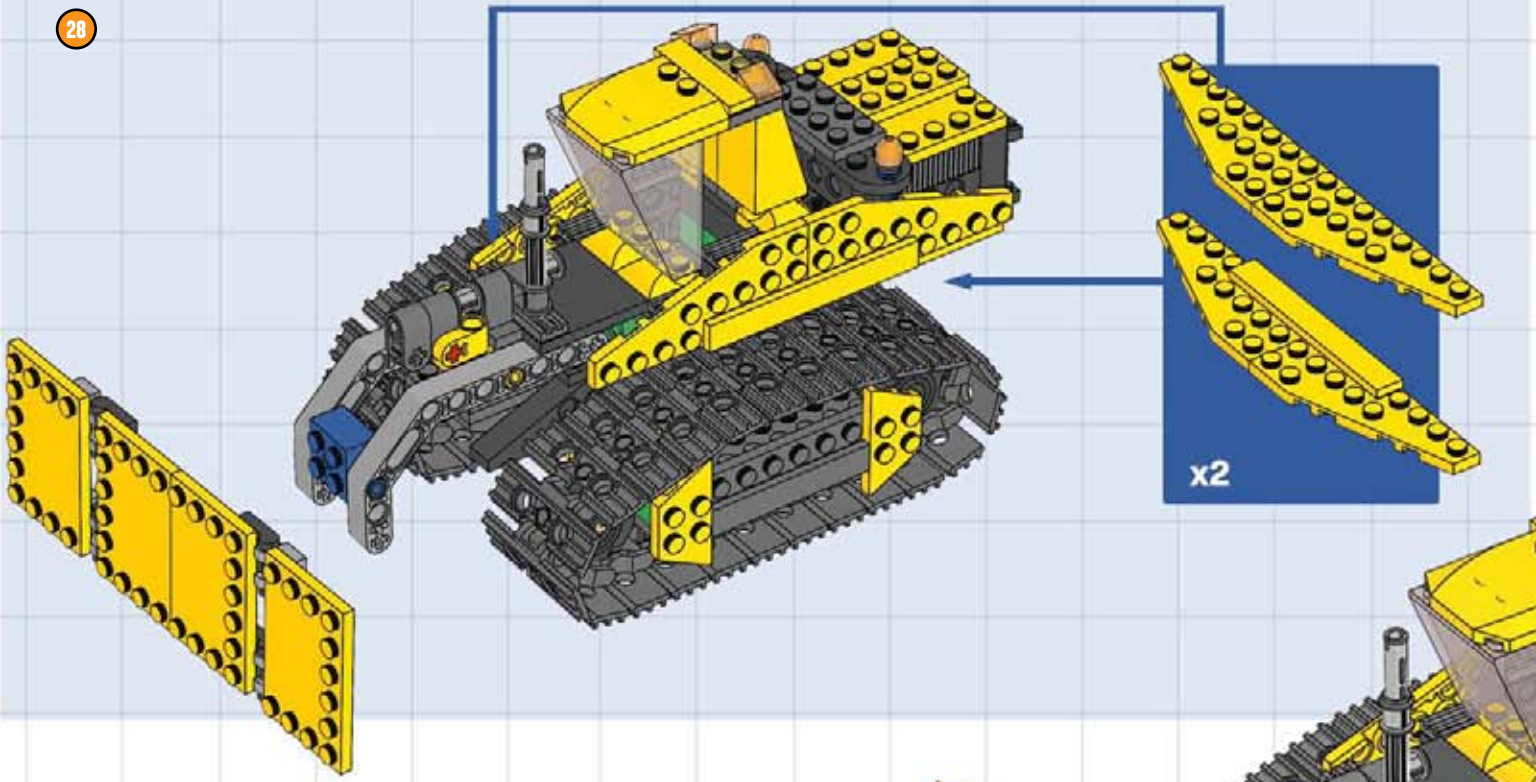

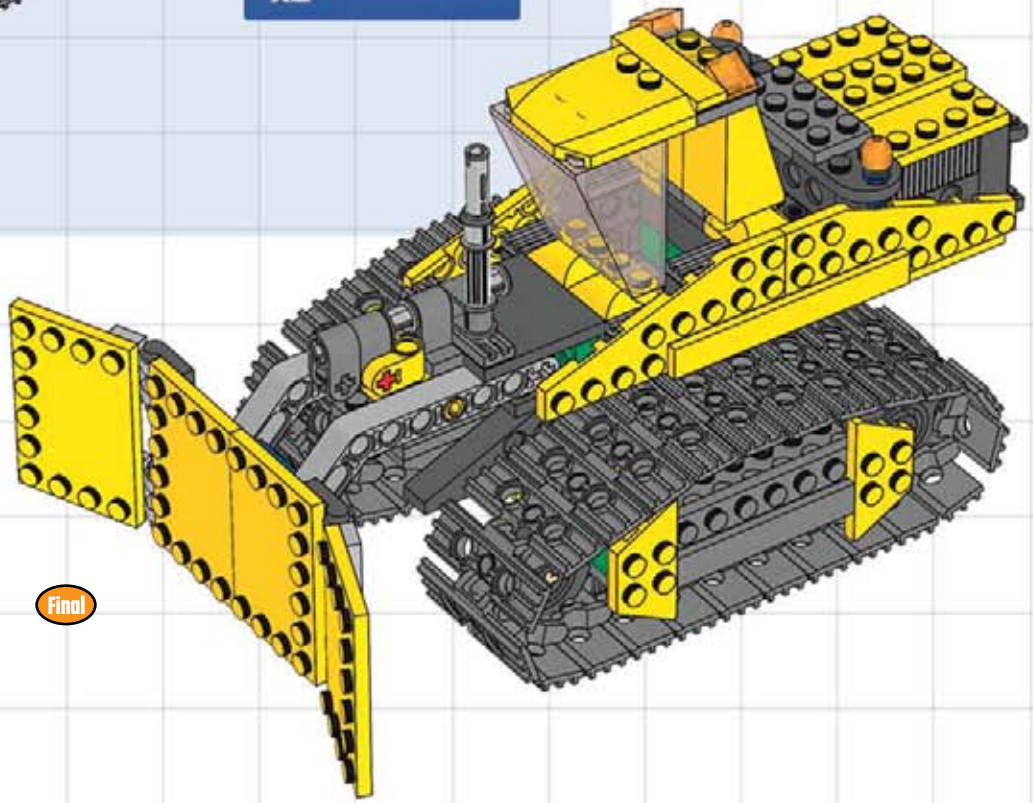

Final